DIGITAL LOGIC FUNDAMENTALS

Course Code	:30801220
Credit Hours	:3
Prerequisite	: 30801101

Chapter 3

Universal Gates & proof of Demorgan’s law

UNIVERSAL GATES

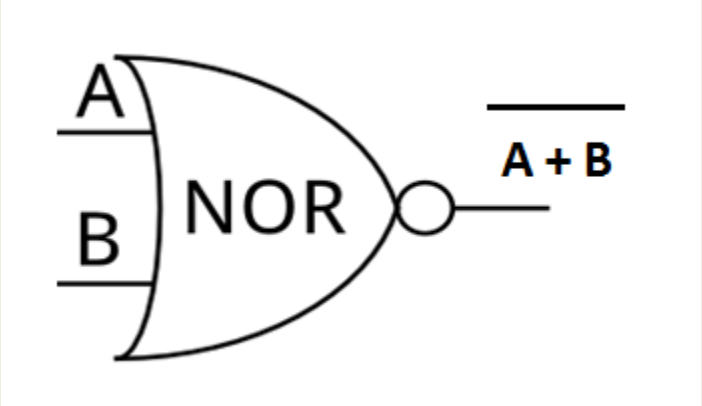

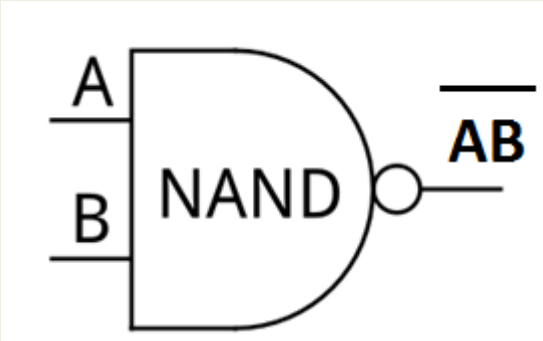

Universal Gates: NAND & NOR gates

- Digital circuits are frequently constructed with NAND or NOR gates rather than with AND and OR gates.
- The logical operations of AND, OR and NOT can be obtained with NAND or NOR gates only.
- Hence, NAND and NOR gates are called Universal gates
- They can be used to implement any other types of gates

NAND & NOR gates

X NAND Y

X	Y	X NAND Y
0	0	1
0	1	1
1	0	1
1	1	0

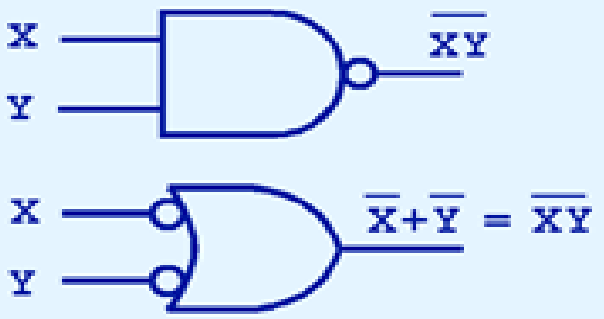

X NOR Y

X	Y	X NOR Y
0	0	1
0	1	0
1	0	0
1	1	0

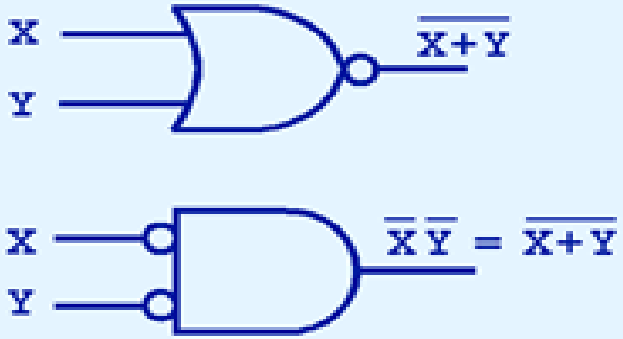

Prove by implementing each pair of circuits and filling their relevant truth tables

NAND & NOR gates

- NAND and NOR are known as *universal gates* because they are inexpensive to manufacture and any Boolean function can be constructed using only NAND or only NOR gates.

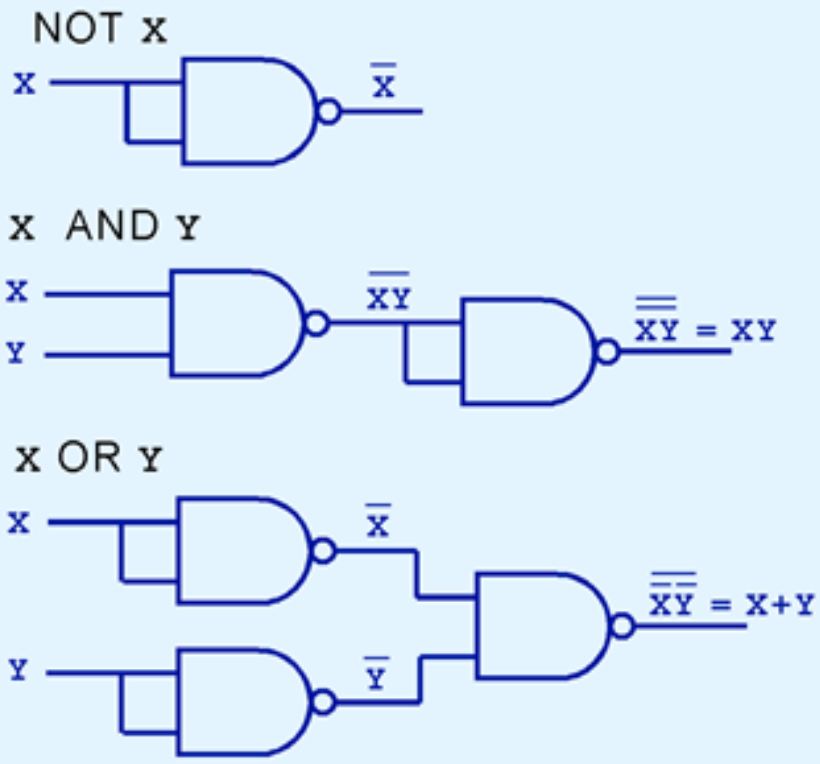

Build and compare

NAND gates

- NAND gates are sometimes called **universal** gates because they can be used to produce the other basic Boolean functions.

NAND gate is the opposite or the negated/inverted of AND gate

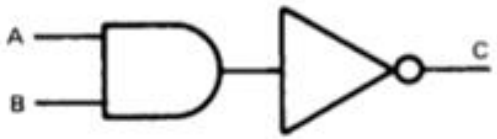

NOT-AND

NAND Gate Symbol

NAND Gate Truth Table		
INPUTS		OUTPUT
B	A	C
LOW	LOW	HIGH
LOW	HIGH	HIGH
HIGH	LOW	HIGH
HIGH	HIGH	LOW

$\overline{A \cdot B} = C$
NAND Gate
Boolean expression

Inverter using NAND gate

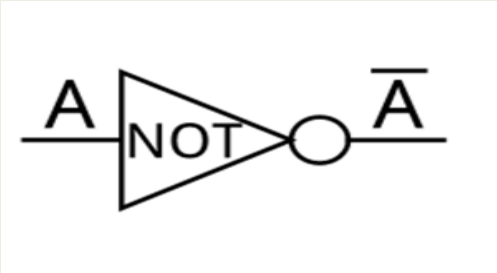

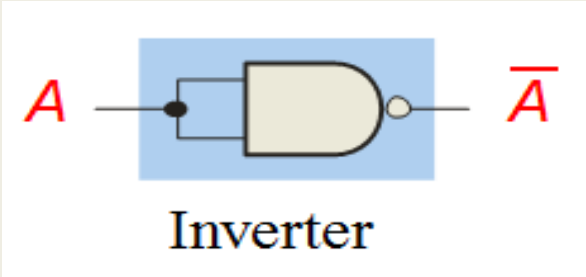

A → NAND (negative) → A’

AND Gate using NAND gate

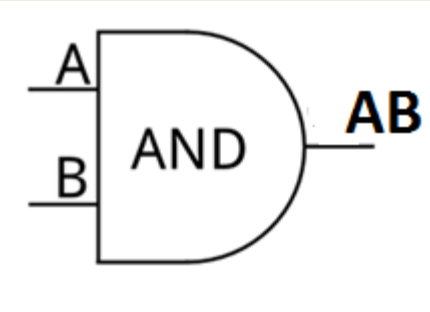

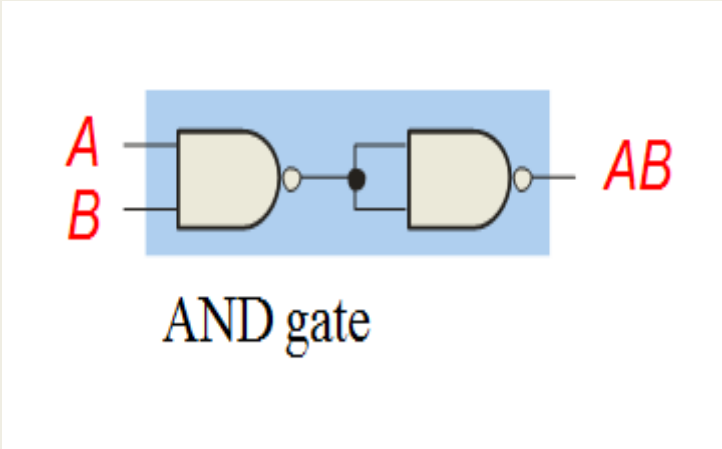

A NAND B → (AB)' → NAND (negative) نفي النفي اثبات → AB

OR Gate using NAND gate

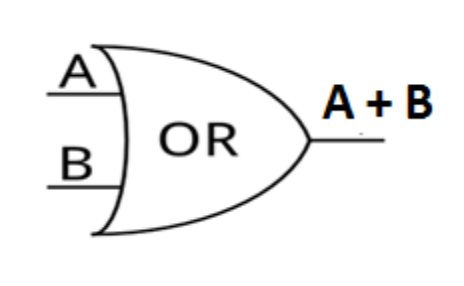

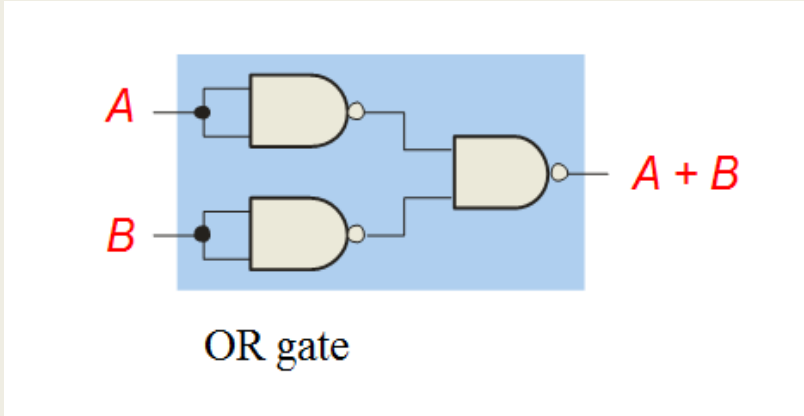

(A’ . B’) → NAND (negative) → Demorgan → A +B

NOR Gate using NAND gate

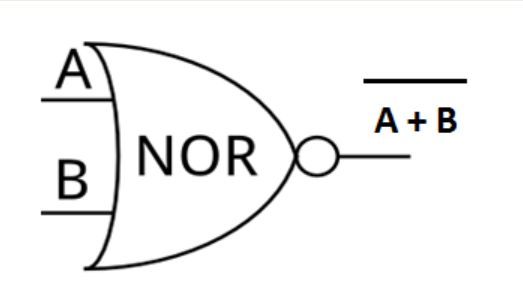

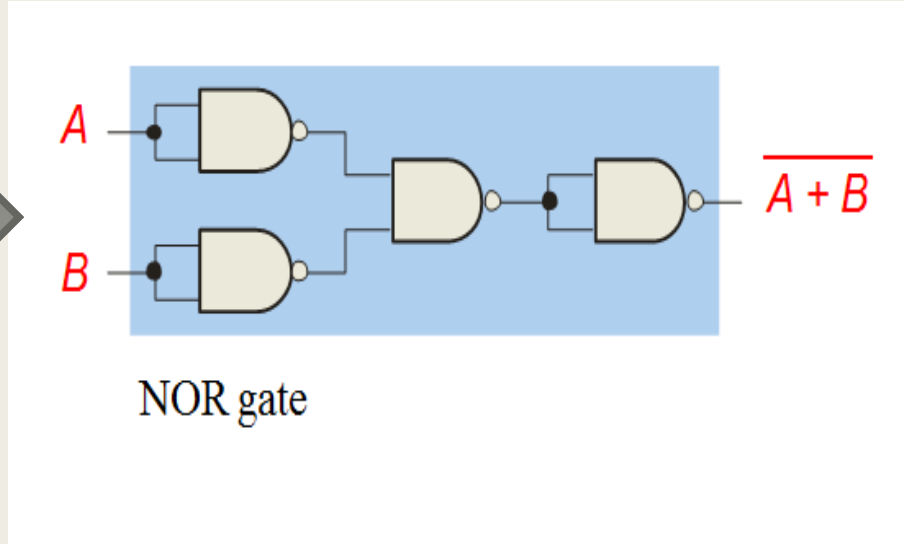

(A'.B') → NAND (negative) → Demorgan → A + B → NAND (negative) → (A+B)'

NOR Gate

- NOR gates are sometimes called **universal** gates because they can be used to produce the other basic Boolean functions.

NOR gate is the opposite or the negated/inverted of OR gate

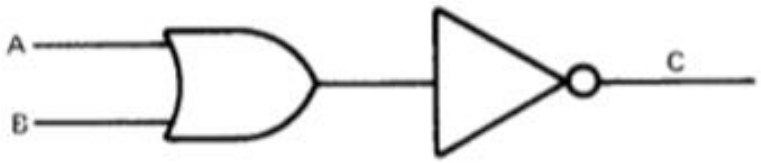

NOT OR

NOR Gate Symbol

Inverter using NOR gate

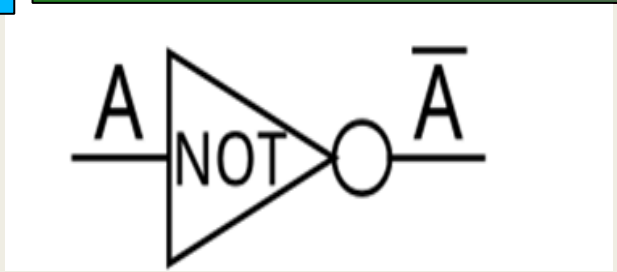

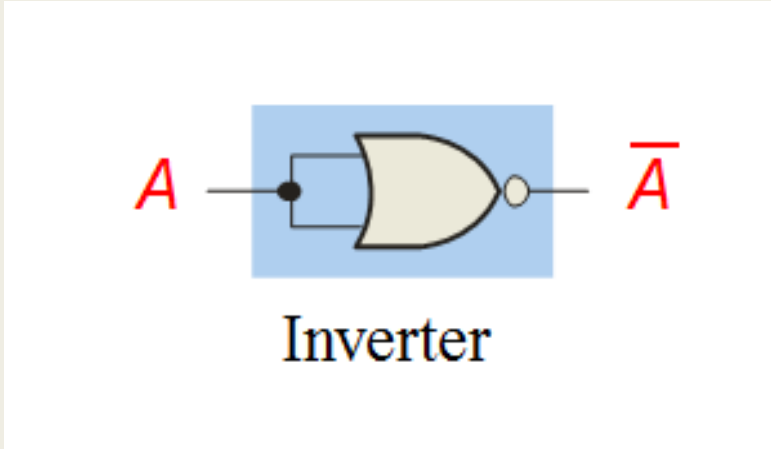

A → NOR (negative) → A’

OR Gate using NOR gate

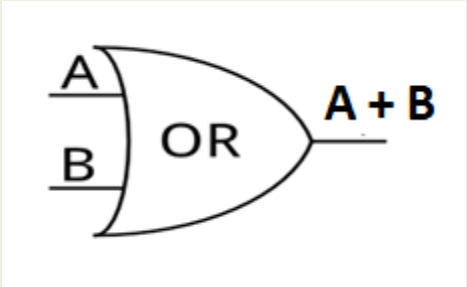

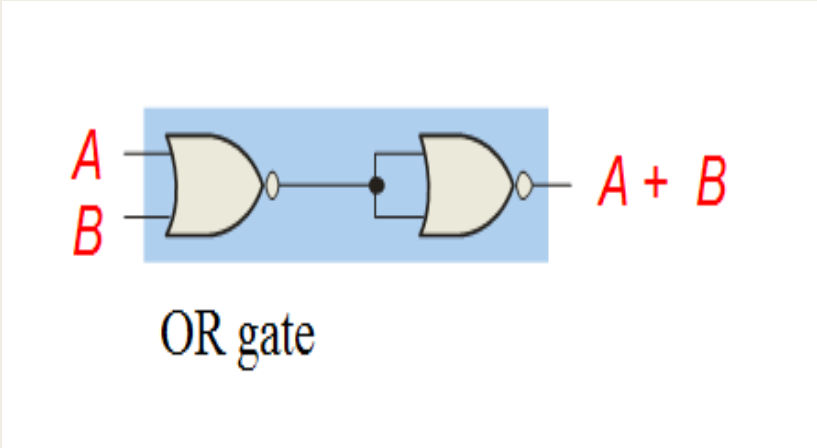

A NOR B → (A + B)’ → NOR (negative) → نفي النفي اثبات → A + B

AND Gate using NOR gate

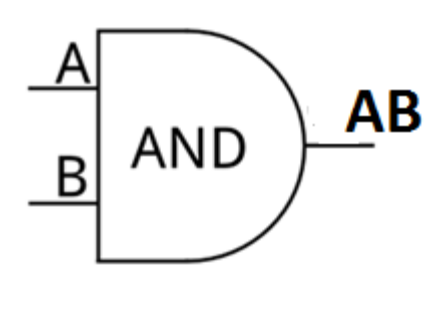

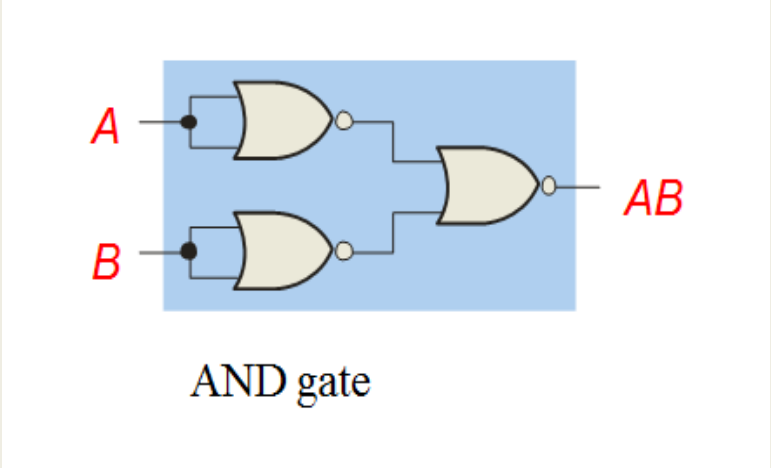

A → NOR → A'
B → NOR → B'
A' NOR B' → (A' + B') → Negative → Demorgan → AB

NAND Gate using NOR gate

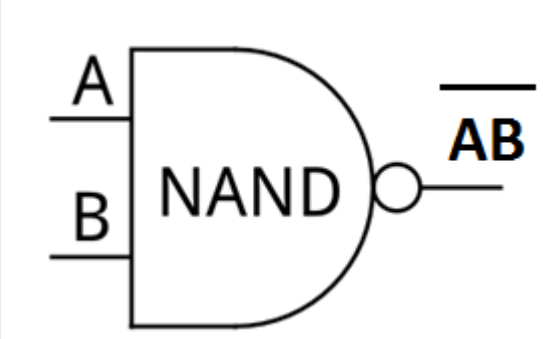

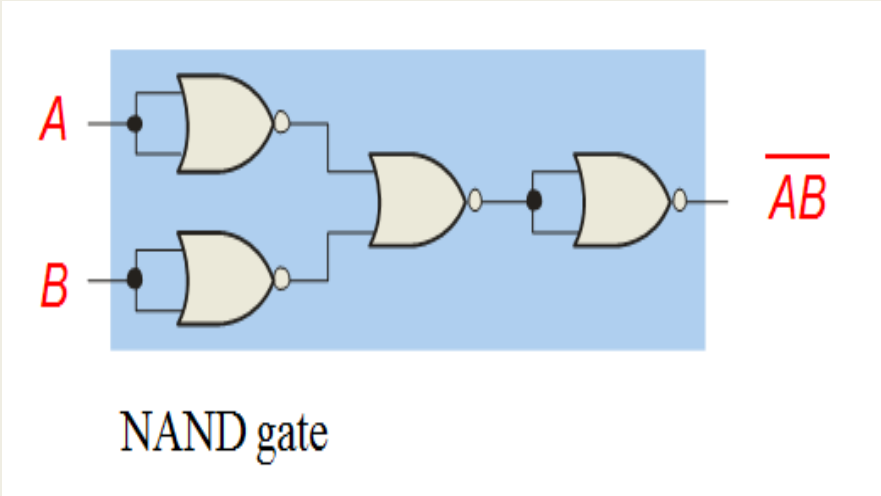

A → NOR → A'
B → NOR → B'
A' NOR B' → (A' + B') → negative → Demorgan → AB → NOR (negative) → (AB)'

Experiment #5: Implementation with only NAND gates or NOR gates

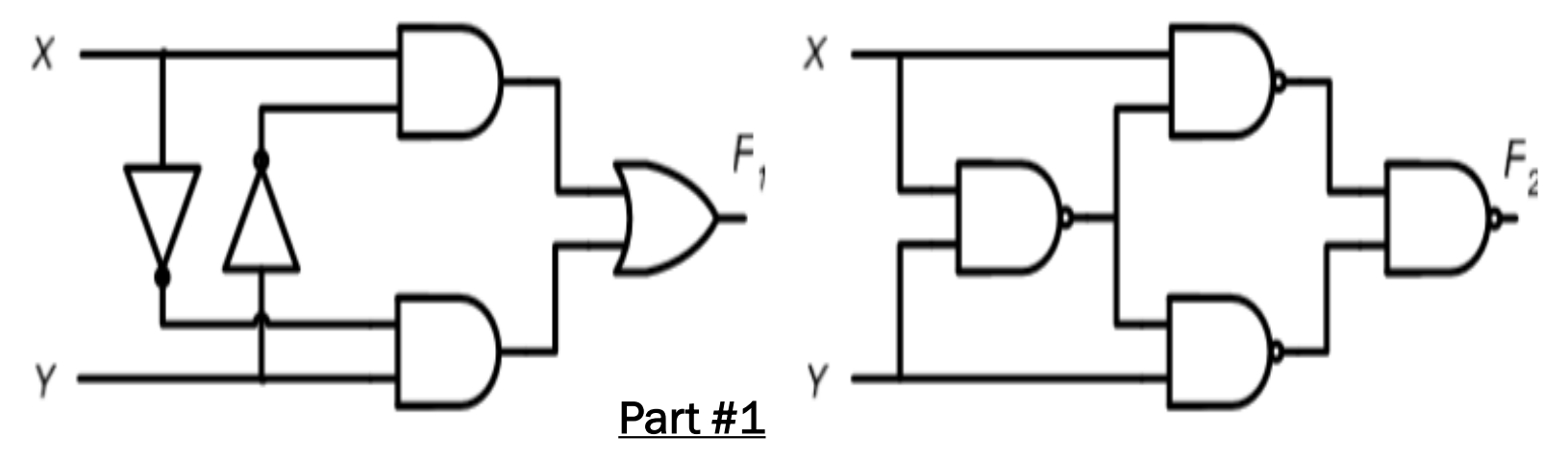

1. Obtain the Boolean functions for functions F1 and F2
2. Obtain the truth tables for both F1 and F2

Truth Table

X	Y	F_1	F_2
0	0	0	0
0	1	1	1
1	0	1	1
1	1	0	0

Experiment #5 (Cont.)

- 3. Draw and simulates the circuits for both functions F1 and F2
- 4. Compare the cost of building the circuit for F1 with that of F2 in terms of the following table:

Table: Circuit Cost

Function	Number of			
	Literals	Terms	Gates	ICs
F_1				
F_2				

Part #2

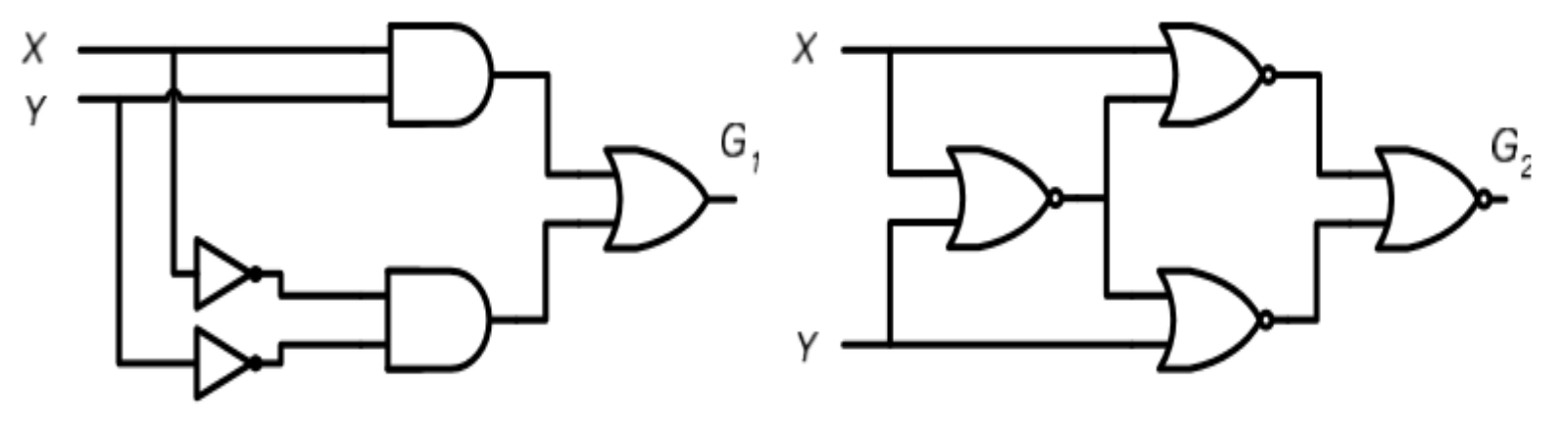

1. Obtain the Boolean functions for functions G1 and G2
2. Obtain the truth tables for both G1 and G2

Truth Table

X	Y	G_1	G_2
0	0	1	1
0	1	0	0
1	0	0	0
1	1	1	1

Part #2 (Cont.)

3. Draw and simulates the circuits for both functions G1 and G2

4. Compare the cost of building the circuit for G1 with that of G2 in terms of the following table:

Table: Circuit Cost

Function	Number of			
	Literals	Terms	Gates	ICs
F_1				
F_2				

Part #1 Solution

$$F1 = \overline{X} . Y + X . \overline{Y}$$

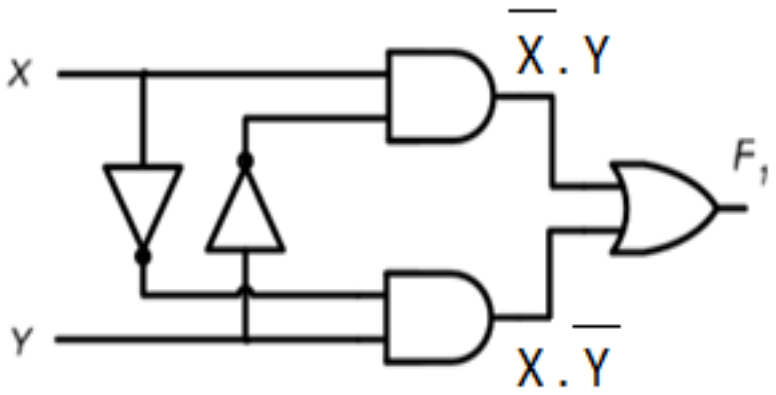

$$\overline{X} . Y + X . \overline{Y}$$

$$F2 = \overline{\left(\overline{\overline{XY}\,X}\right) . \left(\overline{\overline{XY}\,Y}\right)}$$

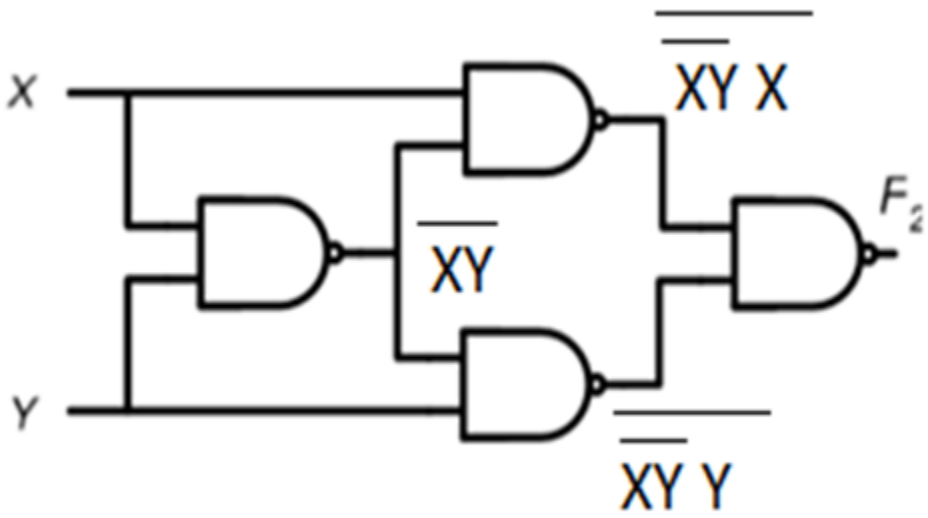

$$\overline{\left(\overline{\overline{XY}\,X}\right) \left(\overline{\overline{XY}\,Y}\right)}$$

Part #2 Solution

$$G1 = X.Y + \overline{X}.\overline{Y}$$

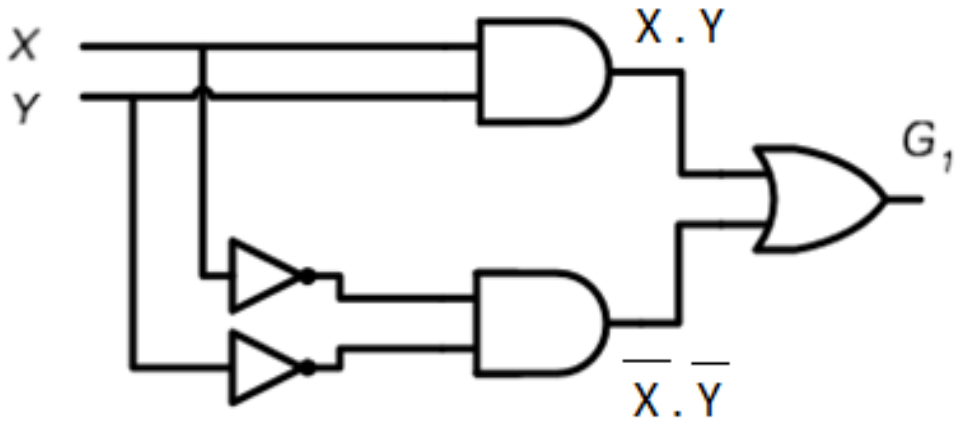

$$G1 = X.Y + \overline{X}.\overline{Y}$$

$$G2 = \overline{\overline{\overline{\overline{(\overline{X+Y})+X}}}+\overline{\overline{(\overline{X+Y})+Y}}}$$

$$\overline{\overline{(\overline{X+Y})+X}}$$

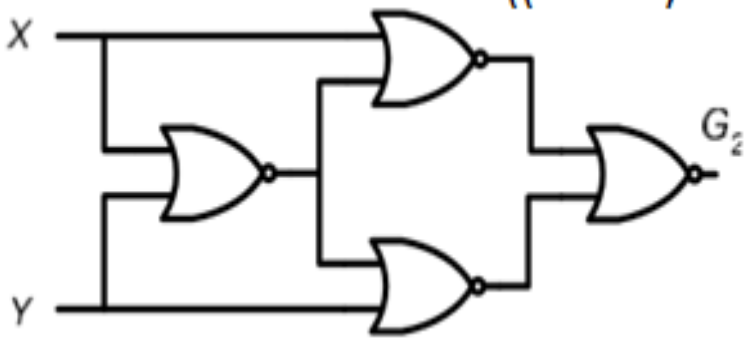

$$\overline{\overline{(\overline{X+Y})+Y}}$$

$$G2 = \overline{\overline{\overline{\overline{(\overline{X+Y})+X}}}+\overline{\overline{(\overline{X+Y})+Y}}}$$

PROOF OF DEMORGAN'S THEOREM

$$\overline{AB} \rightarrow \overline{A} + \overline{B}$$

NAND to *Negative-OR*

$$\overline{A + B} \rightarrow \overline{A}\,\overline{B}$$

NOR to *Negative-AND*

Demorgan's Equation (1)

- Using Proteus construct two circuits corresponding to the following functions:

$$\overline{A} \cdot \overline{B} \quad = \quad \overline{(A+B)}$$

respectively

Negative And = NOR

- Show that for all combinations of A and B, the two circuits give identical results

Circuit 1

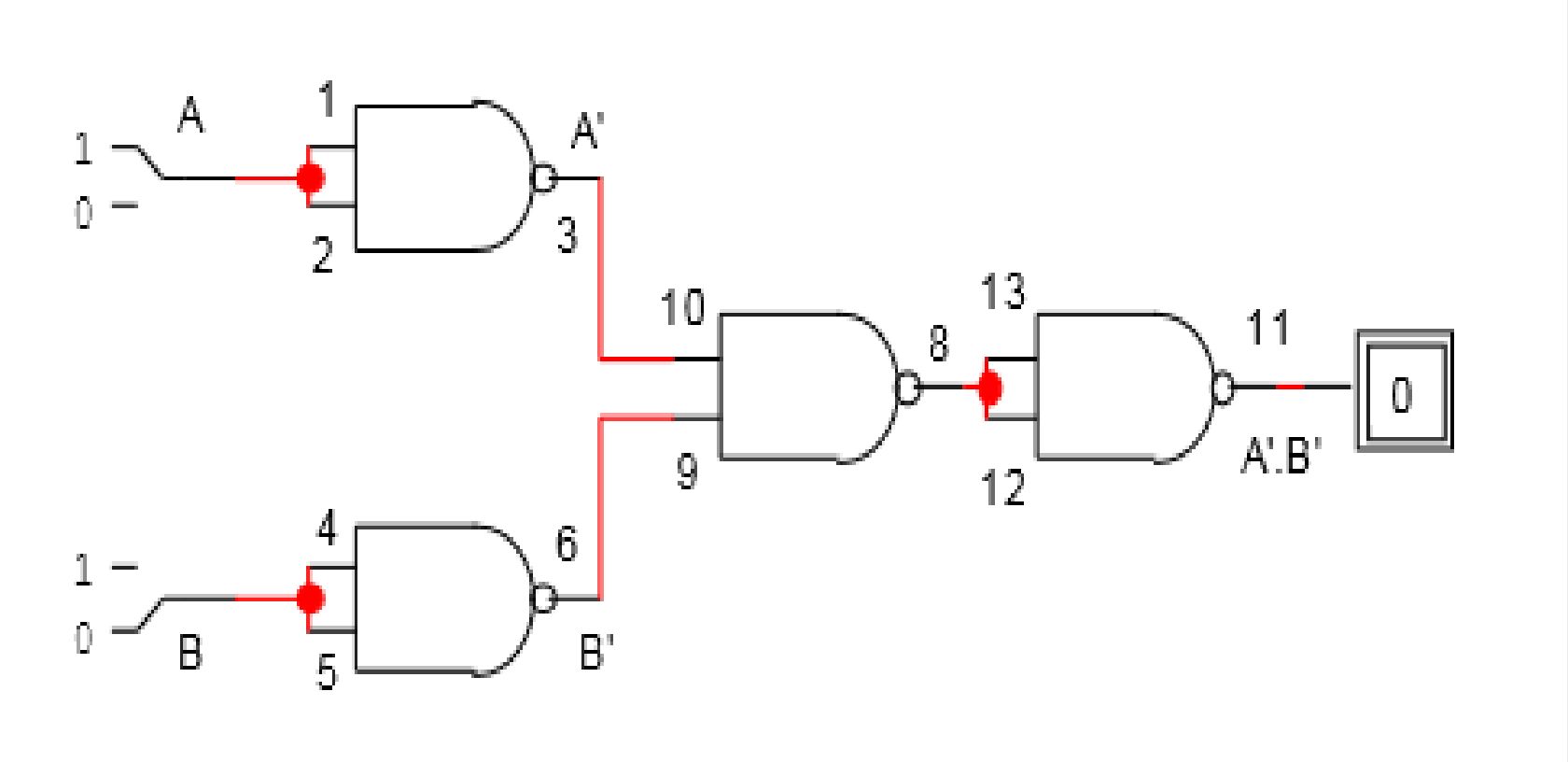

Circuit 2

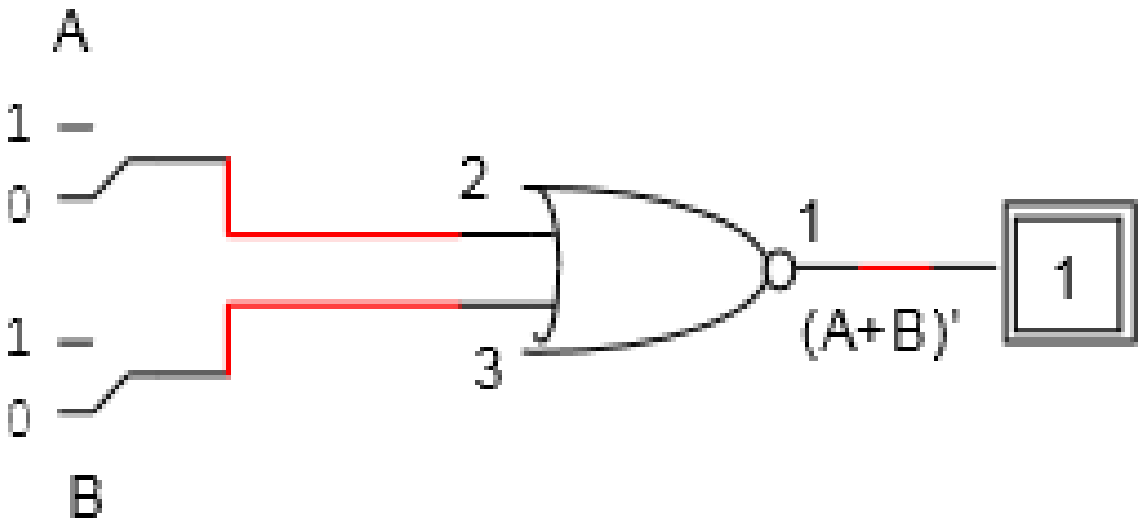

Demorgan's Equation (2)

- Using Proteus construct two circuits corresponding to the following functions:

$$\overline{A} + \overline{B} = \overline{(A \cdot B)}$$

respectively

Negative OR = Nand

- Show that for all combinations of A and B, the two circuits give identical results

Circuit 1

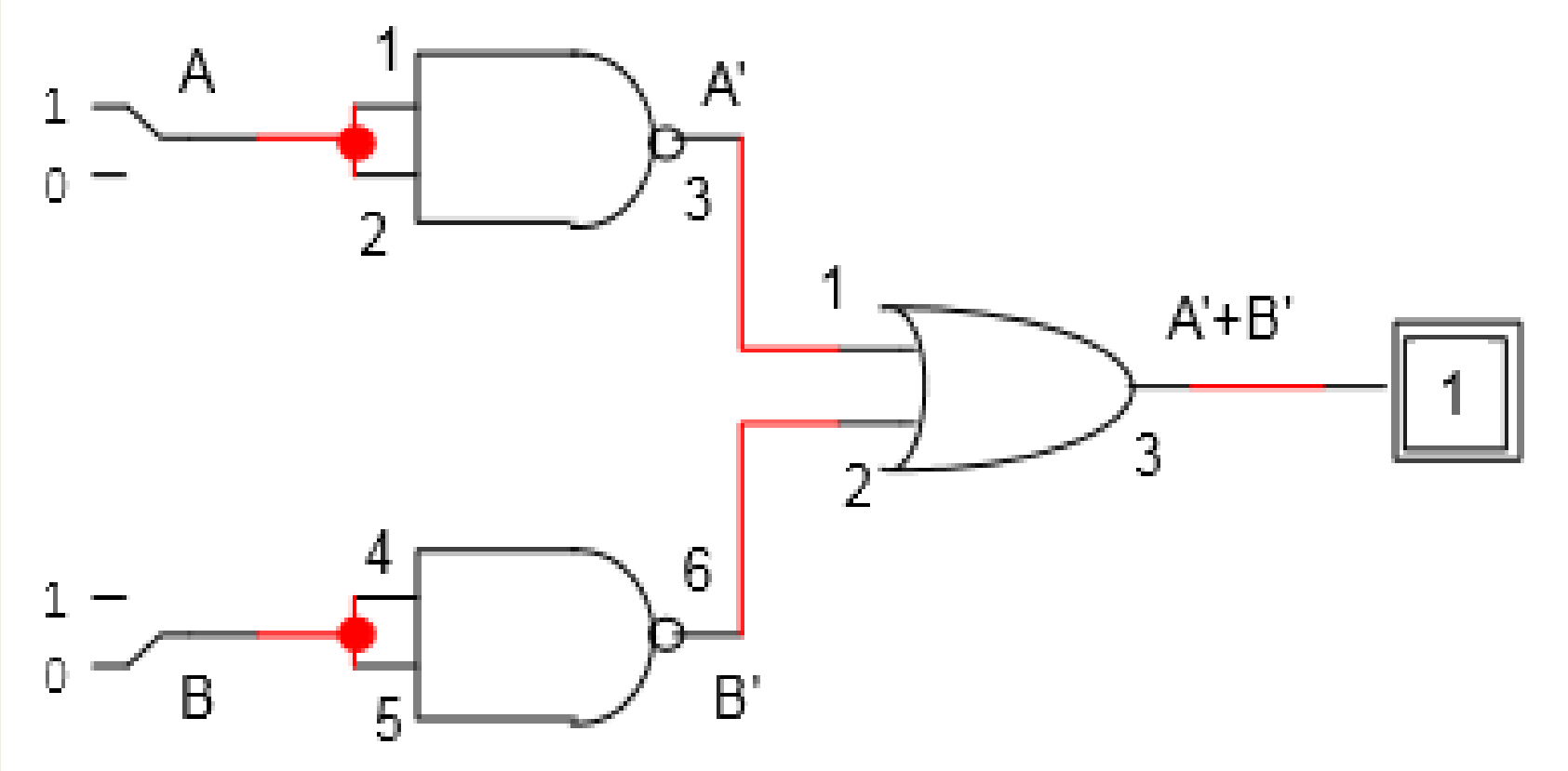

Circuit 2

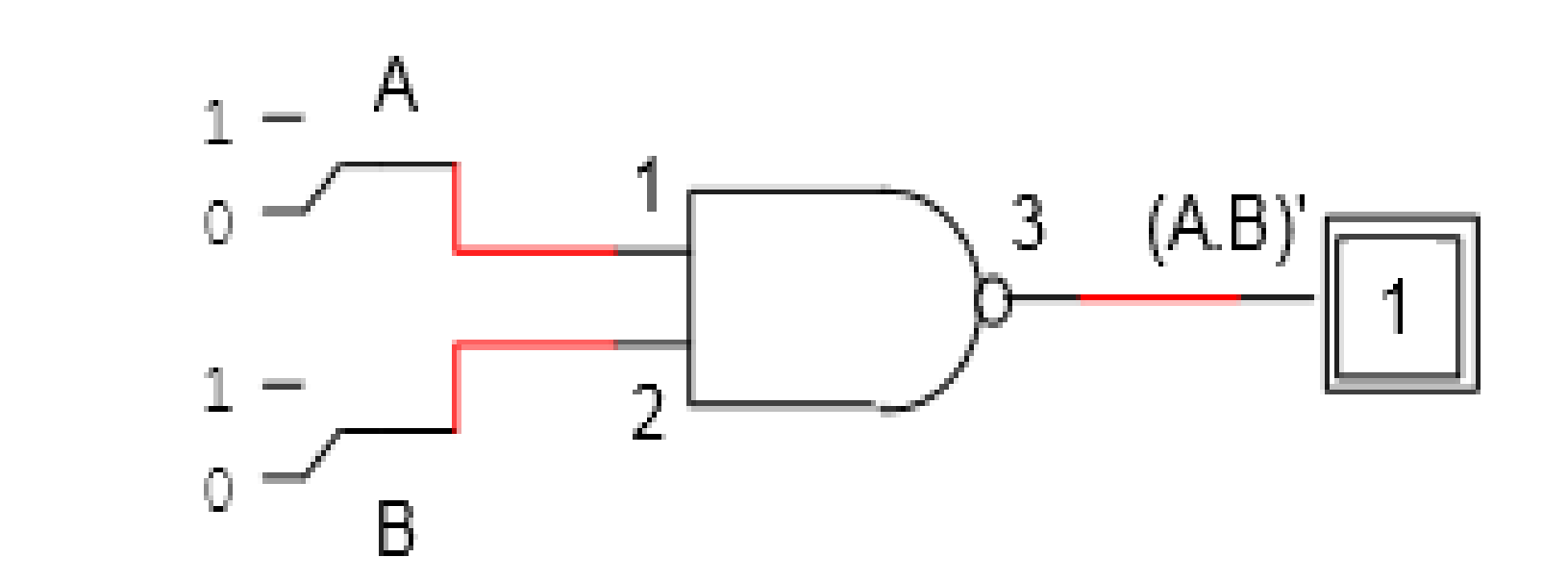

Summary / Demorgan 1

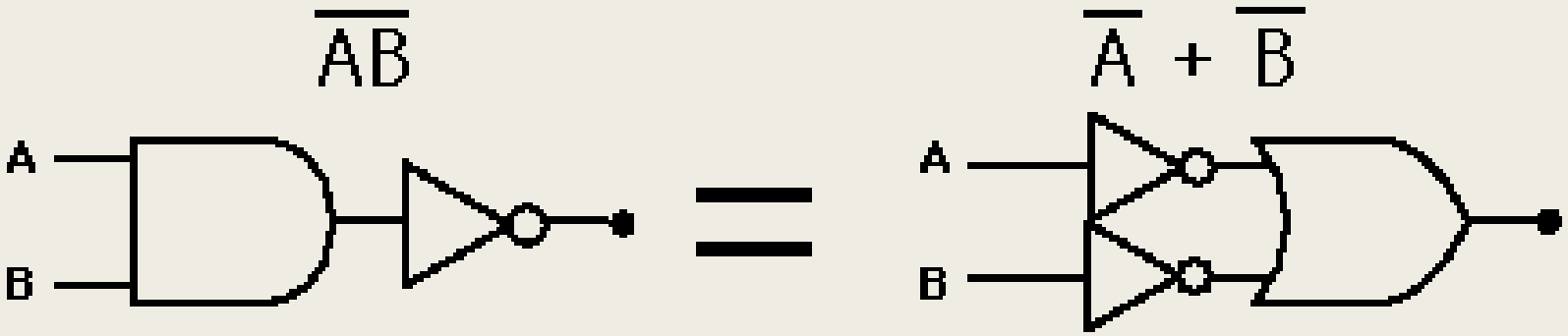

A NAND gate is equivalent to an inversion followed by an OR

Summary / Demorgan 2

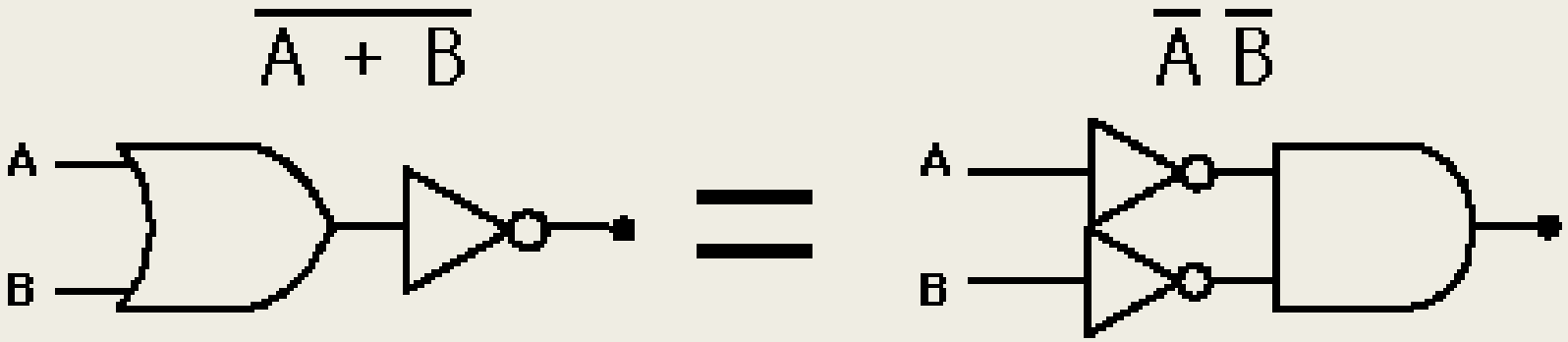

A NOR gate is equivalent to an inversion followed by an AND

تكوين البوابة AND باستخدام عملية العكس المتكرر

$$(\overline{\overline{A \bullet B}} = A \bullet B)$$

تكوين البوابة OR باستخدام عملية العكس المتكرر
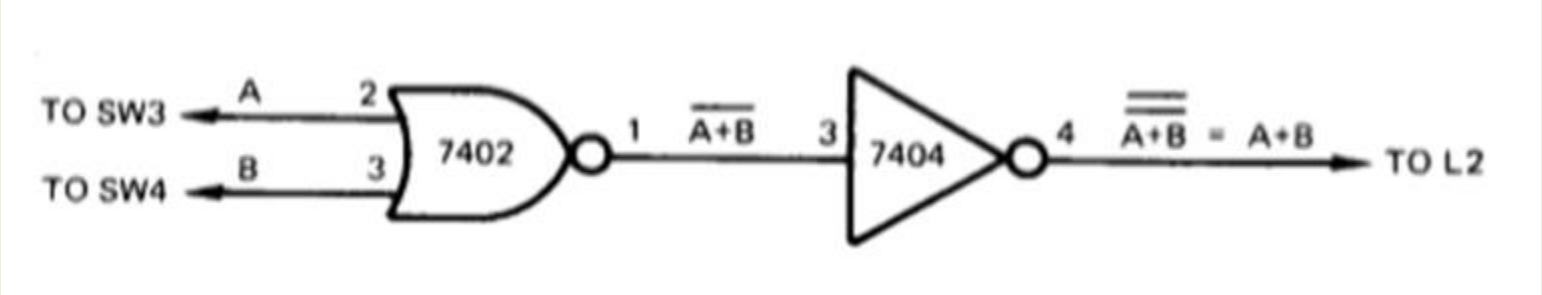
$$(\overline{\overline{A+B}} = A+B)$$